PPS - 100

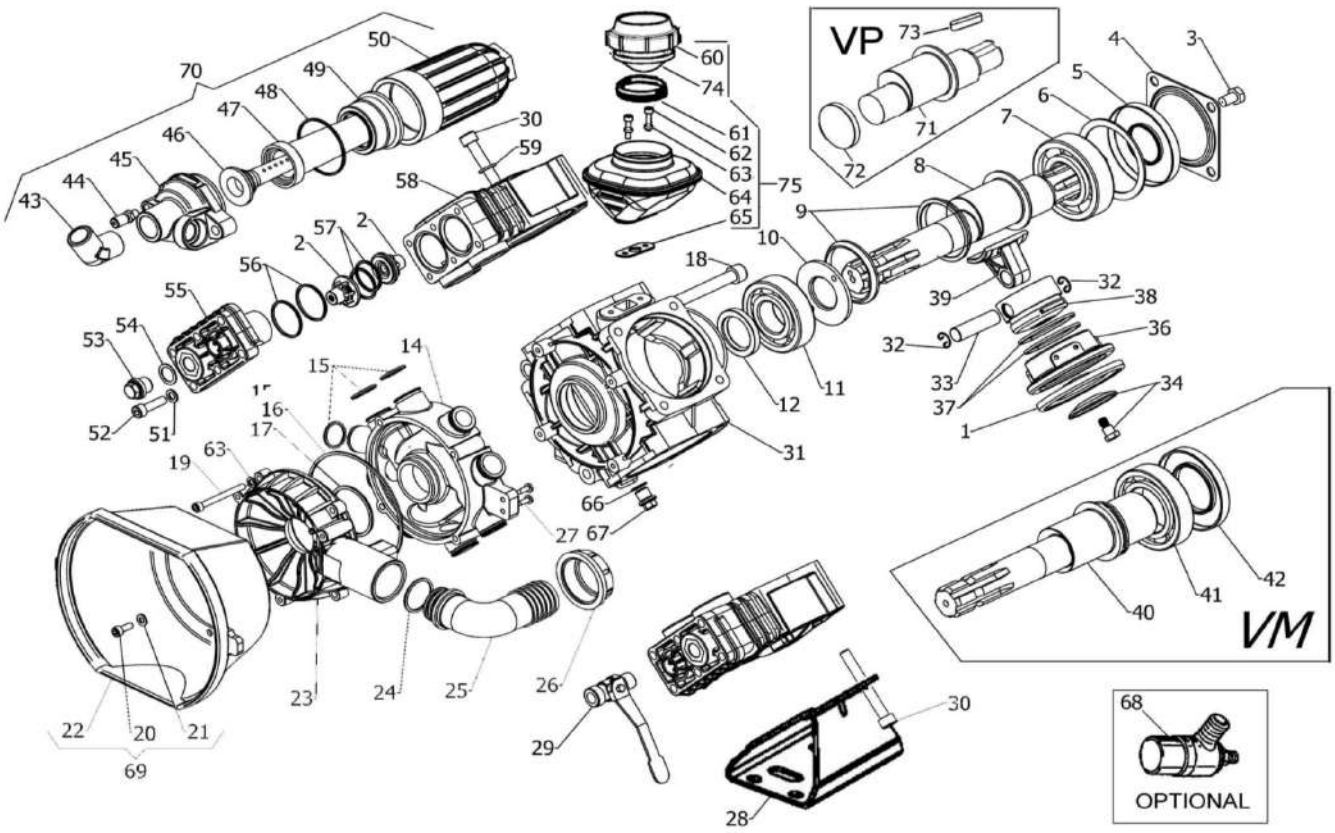

POS.	REF.	DESCRIPTION	QTY
1	230011312	PISTONS DIAPHRAGM BUNA-N	4
1	230011332	PISTONS DIAPHRAGM VITON (OPT.)	4
1	230011002	PISTONS DIAPHRAGM DESMOPAN (OPT.)	4
2	239805973	VALVE ASSY	8
3	863187002	SCREW M10X18 UNI5739	4
4	170013612	COVER	1
5	802190102	OIL SEAL 40X90X10	1
6	170024762	PACKING SPACER	1
7	812913002	BEARING 45X90X23	1
8	360017262	CRANKSHAFT TYPE VD (1"3/8 M-M)	1
9	980047762	CONROD RING	2
10	360019612	CONROD HOLDING RING	1
11	812867002	BEARING 35X80X21	1
12	802143102	OIL SEAL 35X52X7	1
14	360008322	MANIFOLD	1
15	803204502	O-RING DIA. 2,62X23,81	9
		(KIT VITON)	
16	803291252	O-RING DIA. 3.53X123.4	1
16	803291302	O-RING DIA. 3.53X123.4 (KIT VITON)	1
17	803270002	O-RING DIA. 3.53X49.2	1
17	803270502	O-RING DIA. 3.53X49.2 (KIT VITON)	1
18	864120002	SCREW TCEI M12X110 UNI5931	1
19	862415502	SCREW TCEI M6X60 UNI5931	4
20	861846002	SCREW TCTC 5.5X16 (OPTIONAL)	3
21	843560002	WASHER DIA. 5,5x15x1.6 (OPTIONAL)	3
22	311466322	PLAIN SAFETY CONE OPTIONAL	1
23	360009322	MANIFOLD COVER	1
24	803219102	O-RING DIA. 3,0X30	1
25	840591002	90° ELBOW CONNECTOR DIA. 40-1,57"	1
26	820070002	WING NUT G.1"1/2	1

PPS - 100

27	861843002	SCREW D.4,8X16	2
28	360033612	FOOT	2
29	845544102	LEFT TAP	2
30	863590002	SCREW TCEI M10X80 UNI5931	16
31	360001092	CRANKCASE	1
32	800021002	SNAP RING	8
33	852007002	PISTON PIN 15 X 54	4
34	230055973	KIT DISK INOX+SCREW	4
36	230038012	PISTONS SLEEVE	4
37	818514002	PISTONS RING DIA .62X2,5	8
38	230040092	PISTONS DIA .62	4
39	360015112	CONROD	4
40	360020262	CRANKSHAFT TYPE VM (1"3/8 M-F)	1
41	812969002	BALL BEARING 6210	1
42	802236002	OIL SEAL 50X90X10	1
43	835063282	60° ELBOW CONNECTOR G.3/4 M/M	1
44	861605002	AIR VALVE	1
45	360010282	BALLASTER BOARD	1
46	360013322	INSIDE TUBE BALLASTER	1
47	360007312	BALLASTER DIAPHRAGM	1
48	803210002	O-RING DIA. 2,62X56,82	1
48	803210102	O-RING DIA. 2,62X56,82 (KIT VITON)	1
49	360014092	DIAPHRAGM SPACER BALLASTER	1
50	360011092	TOP BALLASTER	1
51	843685002	WASHER DIA. 8,2X15X1,5 UNI1750	24
52	862730002	SCREW TCEI M8X30 UNI5931	24

53	852579002	CAP G.3/8	2
54	803065002	O-RING DIA. D.1,78X14	2
54	803065102	O-RING DIA. D.1,78X14 (KIT VITON)	2
55	360003322	VALVE COVER	4
56	803219202	O-RING DIA. 3,0X35	8
56	803219502	O-RING DIA. 3,0X35 (KIT VITON)	8
57	803207002	O-RING DIA. 2,62X29,82	8
57	803207502	O-RING DIA. 2,62X29,82 (KIT VITON)	8
58	360002092	HEAD	4
59	843801002	WASHER DIA. 10,5X18X2 UNI1750	8
60	280144322	FILLER COVER	1
61	140116322	SPACER	1
62	862168002	SCREW TCEI M6X22 UNI5931	2
63	843585002	WASHER DIA. 6 UNI6592	6
64	409801973	ASSEMBLY OIL FILLER	1
65	140017722	OIL FILLER GASKET	1
66	824079002	GASKET D.13,2X17X1	1
67	852543502	CAP G.1/4X9	1
68	243040973	SECURITY VALVE 40 BAR (OPTIONAL)	1
69	369814973	PLAIN SAFETY CONE KIT	1
70	369810973	BALLASTER KIT	1
71	360036262	CRANKSHAFT TYPE "VP" (D.35 M)	1
72	802099602	CAP	1
73	806578202	TAB 10X8X35 UNI 6604	1
74	410017312	DIAPHRAGM OIL FILLER	1
75	409809973	OIL FILLER KIT	1

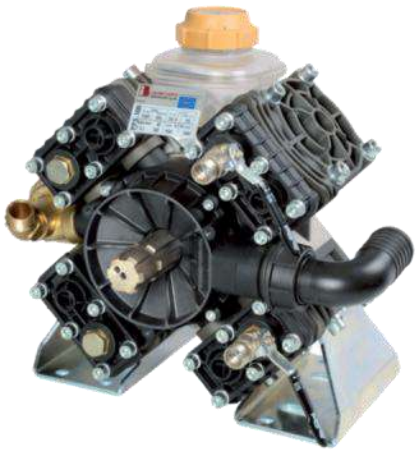

BERTOLINI pumps