POLY 2120 – 2150 VS (1”3/8 M)

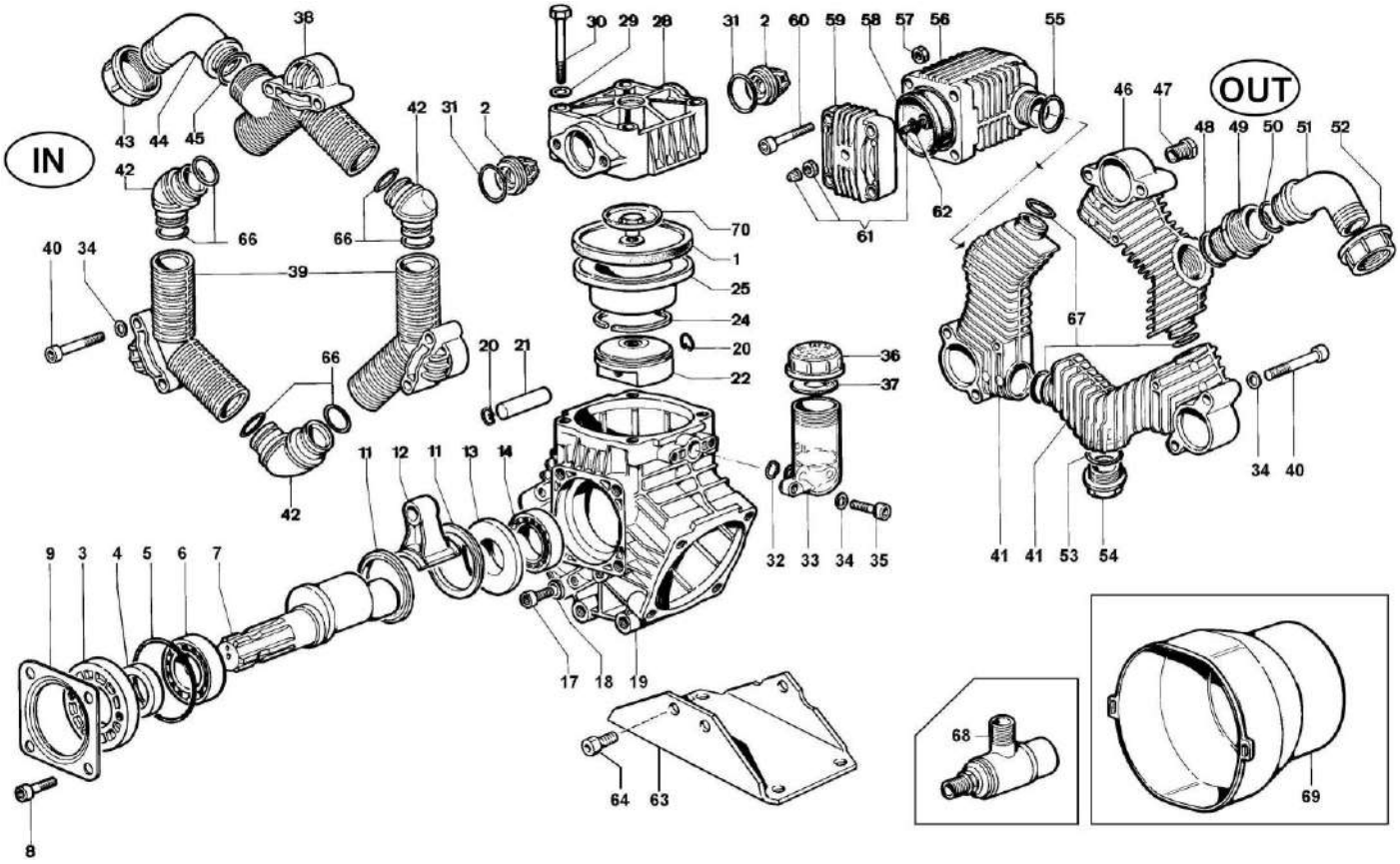

VA (D.1" M)	VD (1"3/8 M-M)	VDA (1"3/8 - D.1" M-M)	VC (1"3/8 - D.1" M-F)
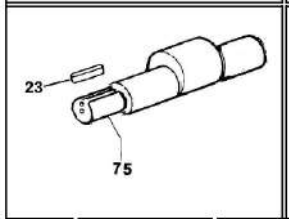	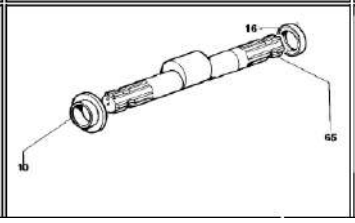	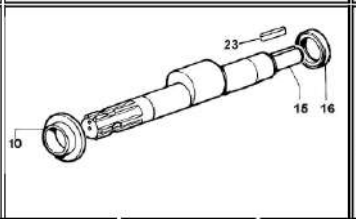	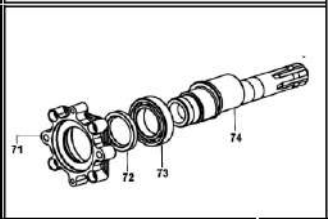

POS.	REF.	DESCRIPTION	QTY
1	620040002	DESMOPAN PISTON DIAPHRAGM	3
1	620040312	BUNA-N PISTON DIAPHRAGM (OPTIONAL)	3
1	620040332	VITON PISTON DIAPHRAGM (OPT.)	3
1	620040362	HPS PISTON DIAPHRAGM (OPT.)	3
2	289905973	S.S. AISI 316 VALVE ASSY (STD.)	6
2	289809973	S.S. AISI 303 VALVE ASSY (OPT.)	6
3	530007322	HOUSING	1
4	802143102	OIL SEAL DIA.35x52x7	1
5	803310002	O-RING 4.0X82	1
6	812846002	BEARING DIA.35x72x17	1
7	620010262	CRANKSHAFT 1"3/8 "VS"	1
8	863187502	SCREW M10x18 UNI5931	4
8	863264002	SCREW M10x25 UNI5931	4
9	170016612	FLANGE	1
10	620029092	SPACER CRANKSHAFT "VD"	1
11	980047762	CONNECTING ROD RING	2
12	620008112	CONROD	3
13	280027092	SHAFT SPACER	1
14	812837002	BEARING DIA.35x62x14	1
15	620027262	CRANKSHAFT "VDA"	1
16	802143102	OIL SEAL DIA.35x52x7	1
17	863694502	SCREW M12x20 UNI5931	1
18	824079002	GASKET DIA.13,2x17x1 COPPER	1
19	620001092	CRANKCASE "VS"	1
19	620030092	CRANKCASE "VD"-"VDA"-"VC"	1
20	800021002	RING DIA.15	6

POLY 2120 – 2150 VS (1”3/8 M)

21	852006702	PISTON PIN DIA.15	3
22	620018092	PISTON DIA.78 (POLY 2150)	3
22	630013092	PISTON DIA.72 (POLY 2120)	3
23	806475002	TAB 6,36x6,36x38	1
24	818540002	PISTON RING DIA.78 (POLY 2150)	3
24	818530002	PISTON RING D.72 (POLY 2120)	3
25	620019012	PISTON SLEEVE (POLY 2150)	3
25	620005012	PISTON SLEEVE DIA.72 (POLY 2120)	3
28	620025322	HEAD	3
29	843844502	WASHER DIA.12,2x21x2,5	12
30	864068002	SCREW M12x75 UNI5931	12
31	803314002	O-RING 4,5x40	6
31	803314502	O-RING 4,5x40 (KIT VITON)	6
32	803180002	O-RING 2,62x15,08	1
33	230008322	OIL FILLER	1
34	843685502	WASHER DIA.8,2x15x1,5	14
35	862730502	SCREW M8x30 UNI5931	2
36	852750002	OIL FILLER CAP	1
37	824120002	GASKET DIA.45x19x1,5	1
38	620004322	MANIFOLD PIPE G.1"1/2	1
39	620003322	MANIFOLD PIPE	2
40	862960002	SCREW M8x65 UNI5931	12
41	620002322	MANIFOLD PIPE (OUTLET)	2
42	620007322	ELBOW MANIFOLD	3
43	820070002	WING NUT G.1"1/2	1
44	840591002	90° ELBOW CONNECTOR DIA.40-1,57"	1
44	840571002	90° ELBOW CONNECTOR DIA.38-1,49" (OPT.)	1
45	803219102	O-RING 3,0x30	1
46	620031322	MANIFOLD PIPE G.3/8	1
47	852576002	CAP G.3/8	1
48	803219102	O-RING 3,0x30	1
48	803219152	O-RING 3,0x30 (KIT VITON)	1
49	835089002	NIPPLES G.1"-G.1"1/4	1
50	803219002	O-RING 3,0x25	1
51	840542402	90° ELBOW CONNECTOR DIA.25-1"	1
51	841608402	STRAIGHT CONNECTOR DIA.25-1" (OPT.)	1
52	820067502	WING NUT G.1"1/4	1
53	803206002	O-RING 2,62x28,25	1
53	803206502	O-RING 2,62x28,25 (KIT VITON)	1
54	852720002	CAP G 1"	1
55	803219102	O-RING 3,0x30	1
55	803219152	O-RING 3,0x30 (KIT VITON)	1
56	270035322	DAMPER BODY	1
57	814574502	NUT M8 UNI5588	4
58	230041312	BALLASTER DIAPHRAGM	1
58	230041362	HPS BALLASTER DIAPHRAGM	1
58	230041332	VITON BALLASTER DIAPHRAGM	1
59	110004092	BALLASTER COVER	1
60	862752102	SCREW M8x35 UNI5931	4
61	861608502	AIR VALVE	1
62	803213002	O-RING 3,0x6	1
63	630006612	MOUNTING RAIL	1
64	863255002	SCREW M10x25 UNI5739	3
65	620024262	CRANKSHAFT "VD"	1
66	803206002	O-RING 2,62x28,25	6
66	803206502	O-RING 2,62x28,25 (KIT VITON)	6
67	803217002	O-RING 3.0x19	3
67	803217502	O-RING 3.0x19 (KIT VITON)	3
68	243016973	SAFETY VALVE 15bar (OPTIONAL)	1
69	311468322	PLAIN SAFETY CONE (OPTIONAL)	1
69	311482322	PLAIN SAFETY CONE (OPTIONAL)	1
70	629811973	KIT SCREW/DISK INOX (POLY 2150)	3
70	629818973	KIT SCREW/DISK INOX (POLY 2120)	3
71	620107072	BALL BEARING HOLDER (VC)	1
72	802191102	OIL SEAL DIA. 45x62x7 (VC)	1
73	812933002	BALL BEARING 6009 (VC)	1
74	620108262	CRANKSHAFT "VC"	1
75	620022262	CRANKSHAFTE "VA"	1



BERTOLINI pumps