POLY-2073-VS-VP-VA-VI

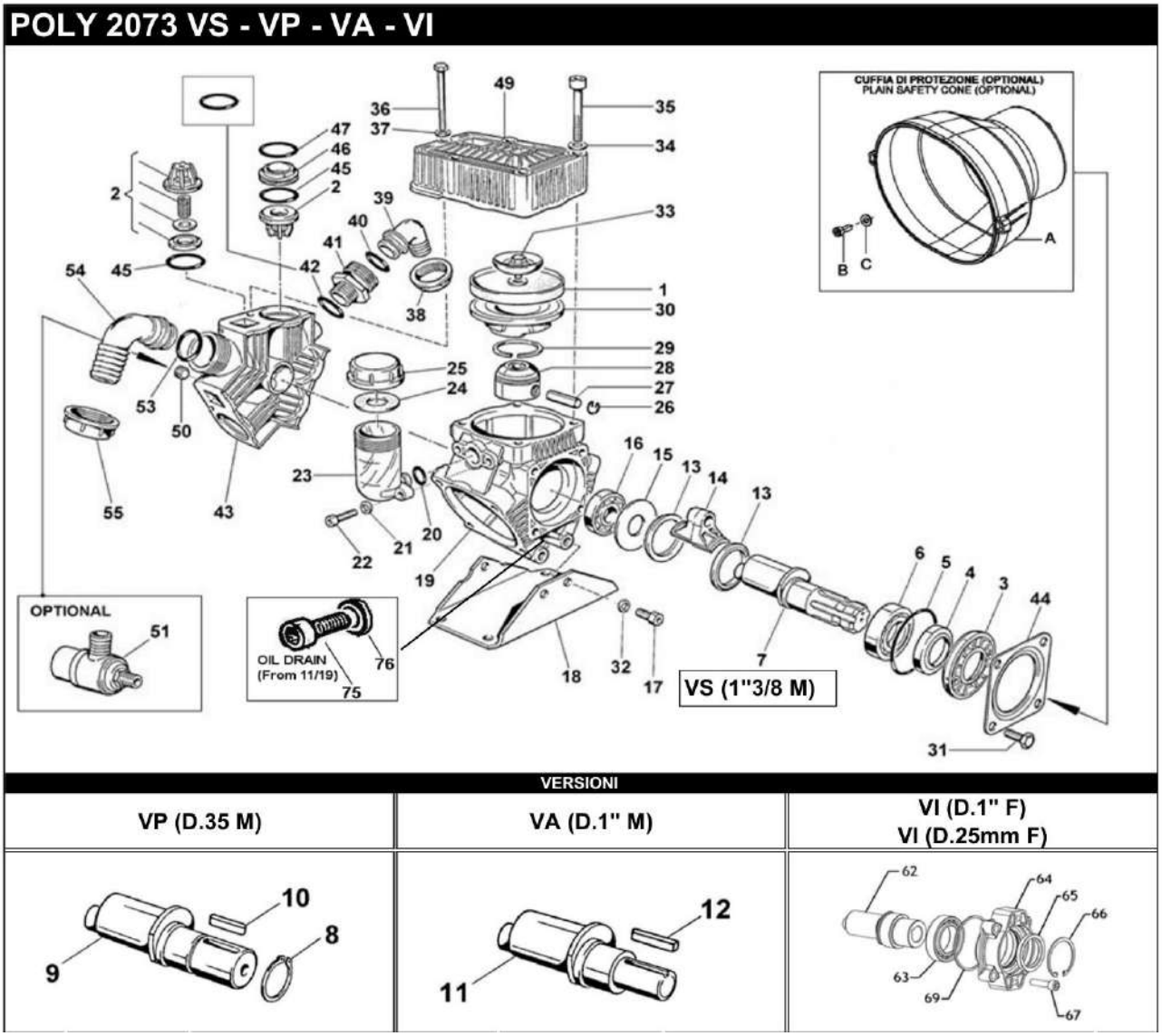

POS.	REF.	DESCRIPTION	QTY
1	950040312	PISTON DIAPHRAGM	3
1	950040332	VITON PISTON DIAPHRAGM	3
1	95004000A	PRE-SET DESMOPAN PISTON DIAPHRAGM	3
1	95004000ADS	PRE-SET DURAMAX PISTON DIAPHRAGM	3
1	950040362	HPS PISTON DIAPHRAGM	3
2	289905973	S.S. AISI 316 VALVE ASSY (STD)	6
2	289809973	S.S. AISI 303 VALVE ASSY (OPT)	6
2	639800973	POLYPROP. VALVE ASSY (OPT)	6
3	530007322	HOUSING	1
4	802143102	OIL SEAL DIA.35x52x7	1
5	803310002	O-RING 4.0X82	1
6	812837002	BEARING DIA.35x62x14	1
7	630009262	CRANKSHAFT "VS" VERSION	1
8	801264002	RING DIA.35	1
9	630011262	CRANKSHAFT "VP" VERSION	1
10	806578002	TAB 10x8x35	1
11	630016262	CRANKSHAFT "VA" VERSION	1
12	806475002	TAB 6,36x6,36x38	1
13	260047762	RING	2
14	230005092	LIGHT ALLOY CONROD	3
14	230045112	BRONZE CONROD (OPT.)	3
15	950097612	CRANKSHAFT SPACER	1
16	812646002	BEARING DIA.20x52x15	1

POLY-2073-VS-VP-VA-VI

17	863265502	SCREW M10x25 UNI5931	3
18	630006612	MOUNTING RAIL	1
19	630001092	CRANKCASE	1
20	803180002	O-RING 2,62x15,08	1
21	843685402	WASHER DIA.8,2x15x1,5	2
22	862684002	SCREW M8x25 UNI5931	2
23	230008322	OIL FILLER	1
24	824120002	GASKET DIA.45x19x1,5 (before 08/2020)	1
24	230097312	OIL FILLER MEMBRANE (from 09/2020)	1
25	852750002	OIL FILLER CAP (before 08/2020)	1
25	852750002A	OIL FILLER CAP (from 09/2020)	1
26	800021002	RING DIA.15	6
27	852006702	PISTON PIN DIA.15	3
28	630014092	PISTON	3
29	818504502	PISTON RING	3
30	630015012	PISTON SLEEVE	3
31	863187052	VITE TCEI M10x18 UNI5931	4
32	843760002	SCHNORR WASHER 10,5x16x1	3
33	639801973	KIT SCREW/DISK INOX	3
34	843805002	WASHER DIA.10,5x21x2	12
35	863562052	SCREW M10x70 UNI5931	12
36	863001052	SCREW M8x75 UNI5931	3
37	843697002	WASHER DIA.8,4x18x2	3
38	820067502	WING NUT G.1"1/4	1
39	840542402	90° ELBOW CONNECTOR DIA.25-1"	1
40	803219052	O-RING 3,0x25 VITON	1
41	835089502	NIPPLES G.1"-G.1"1/4	1
42	803218502	O-RING DIA.3x22 VITON	1
43	630110322	MANIFOLD	1
44	170016612	FLANGE	1

45	803320702	O-RING 5,0x40 VITON	6
46	280229322	VALVE ASSY SPACER	4
47	803219902	O-RING 3,0x39 VITON	4
49	630022322	HEAD	3
50	852585002	CAP G.3/8	1
51	243016973	SAFETY VALVE 15bar (OPTIONAL)	1
53	803219152	O-RING 3,0x30 VITON	1
54	840570002	90° ELBOW CONNECTOR DIA.35-1,37"	1
54	840561002	90° ELBOW CONNECTOR DIA.30-1,18" (OPT.)	1
54	840566002	90° ELBOW CONNECTOR DIA.32-1,25" (OPT.)	1
54	840571002	90° ELBOW CONNECTOR DIA.38-1,49" (OPT.)	1
54	840591002	90° ELBOW CONNECTOR DIA.40-1,57" (OPT.)	1
55	820070002	WING NUT G.1"1/2	1
62	630127262	SHAFT "VI" D.1"	1
62	630127262A	SHAFT "VI" D.25 mm	1
63	812933002	BEARING 45X75X16	1
64	630126092	BEARING COVER	1
65	802191102	OIL SEAL	1
66	801400002	RING	1
67	863348002	SCREW TCEI M10X35	4
69	803287002	O-RING DIA.3,53x82,14	1
75	863694652	SCREW M12x20 UNI5931	1
76	824066002	GASKET DIA.13,2x17x1 COPPER	1
SAFETY CONE FRONT SIDE - OPTIONAL			
A	311468322	PLAIN SAFETY CONE L=135	1
B	/	USE STANDARD SCREW OF PUMP	4
C	/	USARE ROSETTE SPECIALI DELLA CUFFIA	4



BERTOLINI pumps