PA 330.1

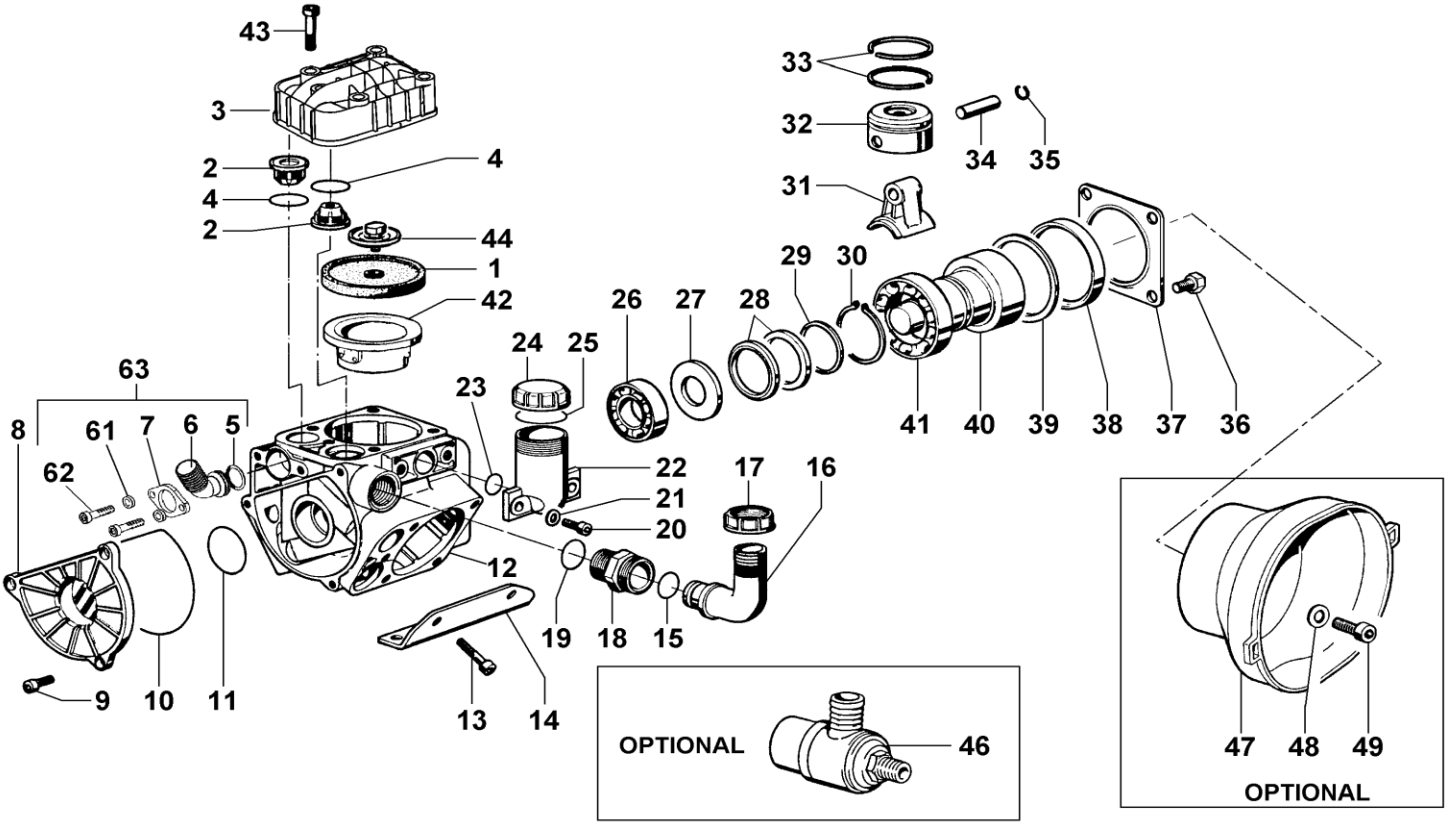

POS.	REF.	DESCRIPTION	QTY
1	030040312	PISTON DIAPHRAGM	3
1	030040002	DESMOPAN PISTON DIAPHRAGM	3
1	030040382	HPS PISTON DIAPHRAGM	3
2	039821973	VALVE ASSY	6
3	030202092	HEAD	3
4	030029362	VALVE SEAL	6
5	803218002	O-RING 3,0x22	1
6	311515092	OUTLET FLANGE G.1/2	1
7	311517612	FLANGE	1
8	030003092	SUCTION COVER	1
9	862131002	SCREW M8x18 UNI5931	3
10	803210662	O-RING 2,62x101,27	1
11	803208302	O-RING 2,62x36,14	1
12	030001092	CRANKCASE	1
13	862900002	SCREW M8x55 UNI5931	4
14	030014612	MOUNTING RAIL	2
15	803200002	O-RING 2,62x22,22	1
16	840542002	90°ELBOW CONNECTOR DIA.25 1"	1
17	820049002	WING NUT M34	1
18	835062102	NIPPLES G.3/4 - M34	1

19	803205002	O-RING 2,62x25,07	1
20	862730002	SCREW M8x30 UNI5931	2
21	843685002	WASHER DIA.8,4x15x1,5	2
22	230008322	OIL FILLER	1
23	803180002	O-RING 2,62x15,08	1
24	852750002	OIL FILLER CAP	1
25	824120002	GASKET DIA.45x19x1,5	1
26	812646002	BEARING DIA.20x52x15	1
27	030011612	SPACER	1
28	940047762	CONROD RING	2
29	030012612	SPACER	1
30	801331002	SHAFT RING D.45	1
31	030005092	CONROD	3
32	030006092	PISTON DIA.48	3
33	818502502	PISTON RING	6
34	852008002	PISTON PIN DIA.10	3
35	800003002	RING DIA.10	6
36	863185002	SCREW M10x16 UNI5739	4
37	170013612	COVER	1
38	802264102	OIL SEAL DIA. 68x90x10	1
39	030015612	SPACER	1
40	030017262	CRANKSHAFT	1
41	812933002	BEARING DIA.45x75x16	1

PA 330.1

42	030007012	PISTON SLEEVE	3
43	862893002	SCREW M8x50 UNI5931	1
44	030021973	KIT DIAPHRAGM WASHER/SCREW AISI 316	3
46	243040973	SAFETY VALVE 40bar (OPTIONAL)	1
47	311482322	PLAIN SAFETY CONE (OPTIONAL)	1

48	843810002	WASHER DIA.10,5x21x2	4
49	863212002	SCREW M10x20 UNI5931	4
61	843585002	WASHER D.6 UNI6592	2
62	862108002	SCREW M6x16 UNI5931	2
63	318916973	KIT G.1/2"	1



BERTOLINI pumps