IDB 1100

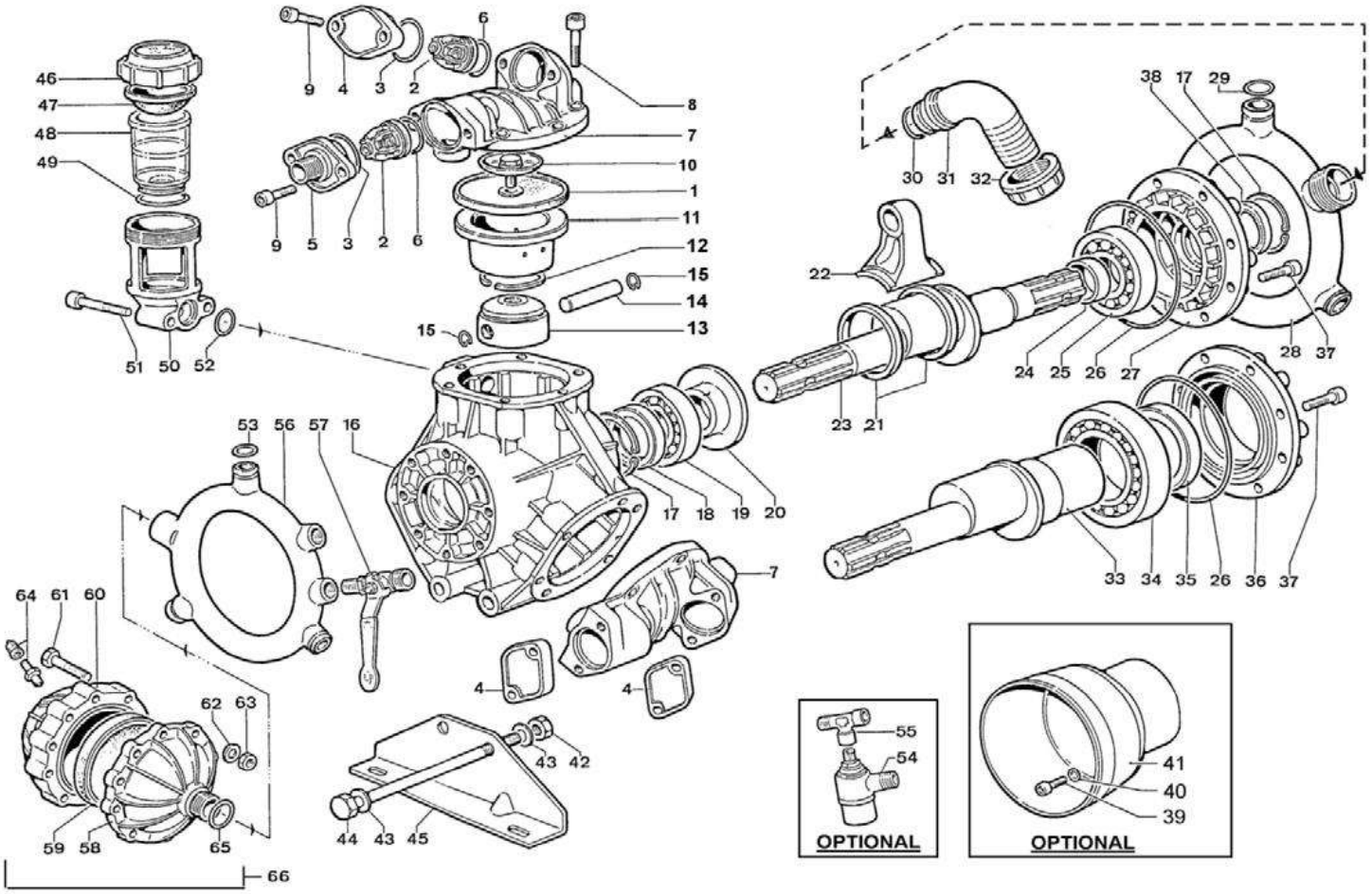

POS.	REF.	DESCRIPTION	QTY
1	950040312	PISTON DIAPHRAGM (OPT.)	3
1	950040332	VITON PISTON DIAPHRAGM (OPT.)	3
1	950040002	DESMOPAN PISTON DIAPHRAGM (OPT.)	3
2	359802973	VALVE ASSY	6
3	803262002	O-RING 3,53x41,28	6
3	803262502	O-RING 3,53x41,28 (KIT VITON)	6
4	350008282	BRASS VALVE COVER	5
5	350018282	VALVE COVER	1
6	803251002	O-RING 3,53x32,93	6
6	803251502	O-RING 3,53x32,93 (KIT VITON)	6
7	480027282	HEAD	3
8	863947002	SCREW M12x40 12.9 UNI 5931	18
9	863265002	SCREW M10x25 UNI5931	12
10	419835973	S.S. DISK + DIAPHRAGM LOCKING BOLT	3
11	430015012	PISTON SLEEVE DIA.70	3

12	818527002	PISTON RING DIA.70	6
13	370016092	PISTON DIA.70	3
14	852007002	PISTON PIN DIA.15x54	3
15	800021002	RING DIA.15	6
16	480001082	CRANKCASE (before 06/2017)	1
16	480036082	CRANKCASE (after 06/2017)	1
17	801369002	RING DIA.52	2
18	802143102	OIL SEAL DIA.35x52x7	1
19	812867002	BEARING DIA.35x80x21	1
20	480007012	SPACER	1
21	140015762	CONROD RING	2
22	410047112	CONROD	3
23	410033262	CRANKSHAFT "VD" (1"3/8 M-M)	1
24	480008412	SPACER "VD"	1
25	812913002	BEARING DIA.40x90x23	1
26	803210682	O-RING 2,62x120,32	1
27	480003092	BEARING COVER (before 06/2017)	1
27	480034092	BEARING COVER (after	1

IDB 1100

		06/2017)	
28	480025122	INLET MANIFOLD	1
29	803204002	O-RING 2,62x23,81	3
29	803204502	O-RING 2,62x23,81 (KIT VITON)	3
30	803219102	O-RING 3,0x30 (OPT.)	1
30	803255002	O-RING 3,53x36,1	1
30	803255502	O-RING 3,53x36,1 (KIT VITON)	1
31	840591002	90 E.C. DIA.40-1,57" (PLAST. OPT.)	1
31	840593002	90 ELBOW CONNECTOR D.40-1,57"	1
32	820070002	WING NUT G.1"1/2 (OPT.)	1
32	820071002	WING NUT G.1"1/2	1
33	480009262	CRANKSHAFT "VM" (1"3/8 M-F)	1
34	813020002	BEARING 70X125X24	1
35	802264102	OIL SEAL DIA. 68x90x10	1
36	480004092	BALL BEARING COVER "VM" (before 06/2017)	1
36	480035092	BALL BEARING COVER "VM" (after 06/2017)	1
37	862562002	SCREW M8x20 UNI5931 (before 06/2017)	8
37	863216002	VITE TCBEI M10x20 DIN 7984 (dal 06/2017)	8
38	802178102	OIL SEAL DIA.40x52x7	1
39	862547002	SCREW M8X18	2
40	843696002	WASHER DIA.8,4x18x2 (OPT.)	2
41	311468322	PLAIN SAFETY CONE (OPTIONAL)	1
41	311482322	PLAIN SAFETY CONE (OPTIONAL)	1
42	814706002	GALVANIZED HEXAGON NUT M12X6	2
44	864139002	SCREW M12x160	2

45	270021612	MOUNTING RAIL	2
46	280144322	OIL FILLER CAP	1
47	410017312	OIL FILLER DIAPHRAGM	1
48	410016322	OIL FILLER	1
49	803209402	O-RING 2,62x44,12	1
50	350009090	BOWL OIL FILLER	1
51	862852002	SCREW M8x45 UNI5931	2
52	803195002	O-RING 2,62x20,24	1
53	803189002	O-RING 2,62x18,72	3
53	803189502	O-RING 2,62x18,72 (KIT VITON)	3
54	243050973	SAFETY VALVE 50 bar (OPTIONAL)	1
55	835020002	3/8 FEMALE-MALE TEE (OPT.)	1
56	480026122	INLET MANIFOLD	1
57	845544002	RIGHT TAP G.3/8-G.1/2	2
58	480021282	LOWER BALLASTER	1
59	930041312	BALLASTER DIAPHRAGM	1
60	930003092	TOP BALLASTER	1
60	480033282	TOP BALLASTER (BR. VERSION) (OPT.)	1
61	862785002	SCREW M 8X40	10
61	862694002	SCREW M8X30 UNI5737 (BR. VERSION) (OPT.)	10
62	843685002	WASHER DIA.8,4x15x1,5	10
63	814575002	NUT M8 UNI5588	10
64	861608502	AIR VALVE	1
65	803200002	O-RING 2,62x22,22	1
65	803200502	O-RING 2,62x22,22 (KIT VITON)	1
66	489802973	PRESS. DAMPER ASSEMBLY (STD. VER.)	1
66	489817973	PRESS. DAMPER ASSEMBLY (OPT. VER. - BR.)	1

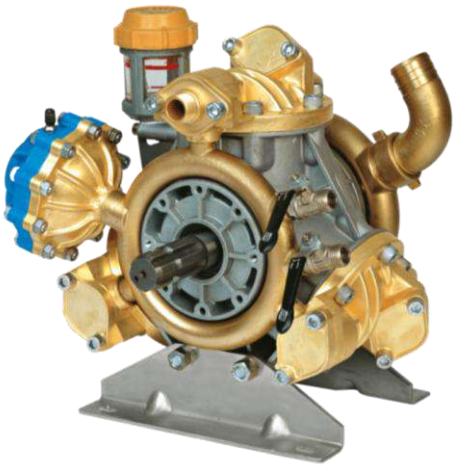

BERTOLINI pumps